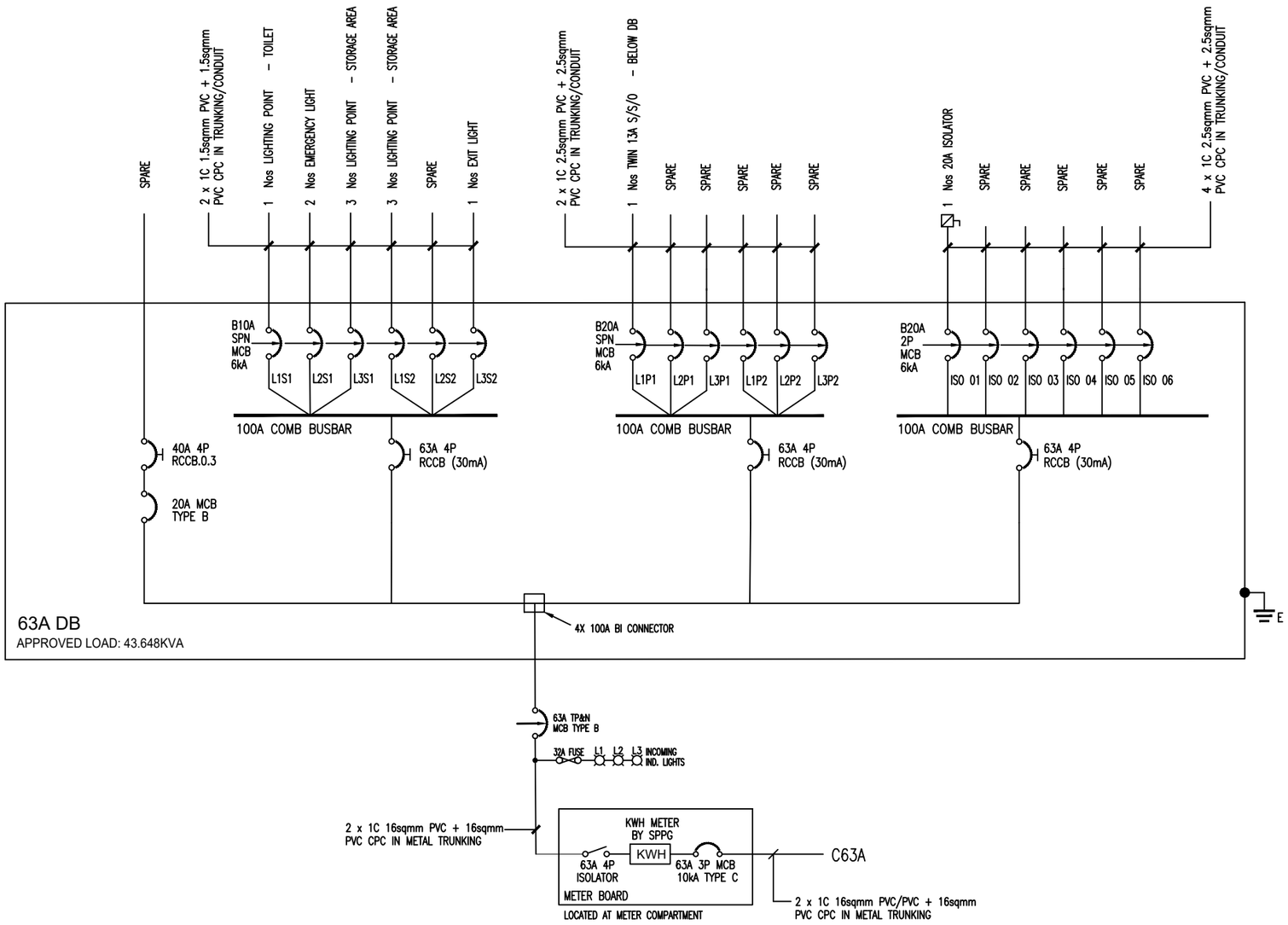

CLIENT / ADDRESS :		ELECTRICAL CONTRACTOR :	DRAWING TITLE :	LEW :	CHECKED :	DATE :
ROYAL EAGLE INTERNATIONAL PTE LTD 11 YISHUN INDUSTRIAL ST 1 #02-109 SINGAPORE 768089		I2R M&E PTE. LTD. 709 Yishun Avenue 5 #01-K1 Singapore 760709 TEL: 9777 1983	SINGLE LINE DIAGRAM (SLD)	EMA LICENSED ELECTRICAL WORKER ELECTRICAL SEOW SWEE LEONG 8/25825 SINGAPORE	Ryan	11 FEB 2025
					DRAWING NO. : I2R-REI-SLD-01	REV : 0